INSTALLATION INSTRUCTIONS NHN PIVOT CLOSER
MODEL NO. PDC100 / PDC100S

NHN Closing Solutions

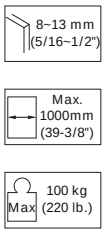

Glass Cutout

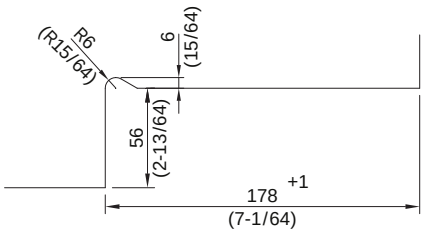

1

Unit : mm
(in.)

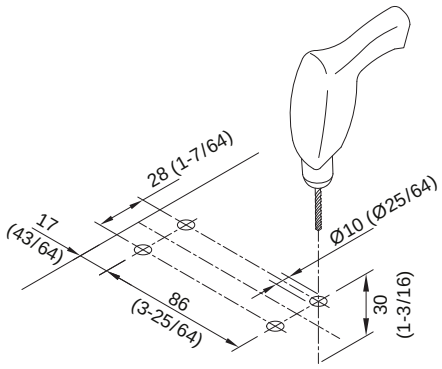

2

Unit : mm
(in.)

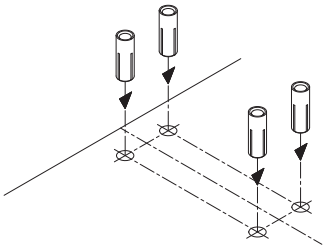

3

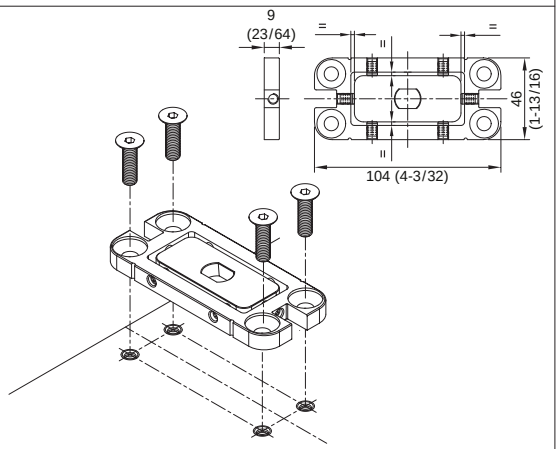

4

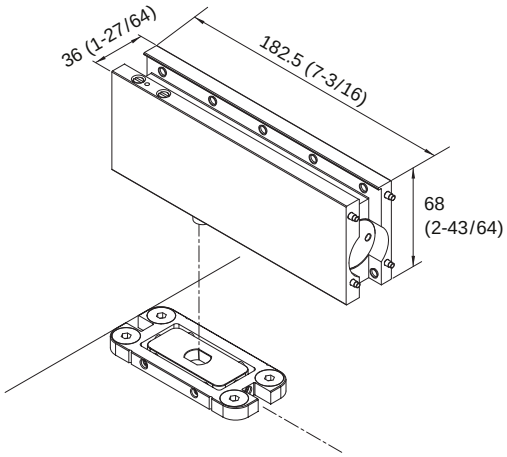

5

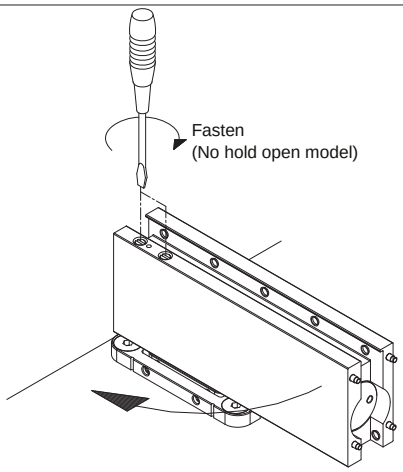

6

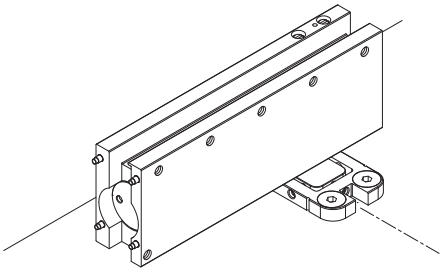

7

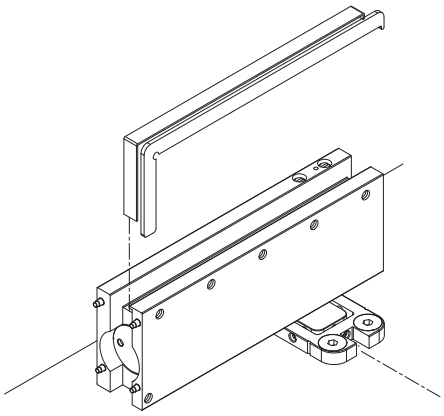

8

E. & O. E. ©Kenwa, Osaka-Japan. 2108A-II-PDC100(S)

INSTALLATION INSTRUCTIONS NHN PIVOT CLOSER
MODEL NO. PDC100 / PDC100S

NHN® Closing Solutions

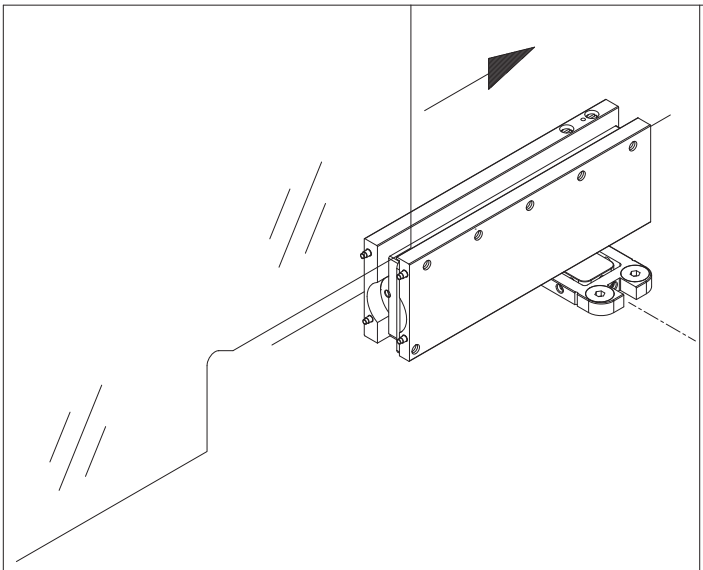

9

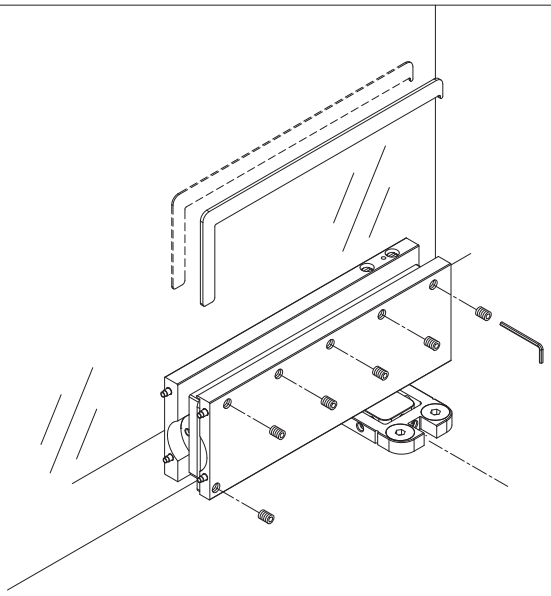

10

Unit : mm
(in.)

Adjust the door position

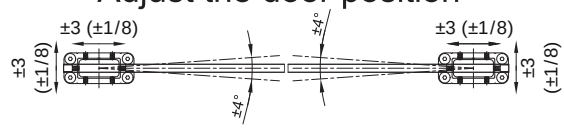

SECURE THE ADAPTER PLATE.
Tighten all 6 grub screws with the allen key
firmly when the adapter plate is in its final and correct position.

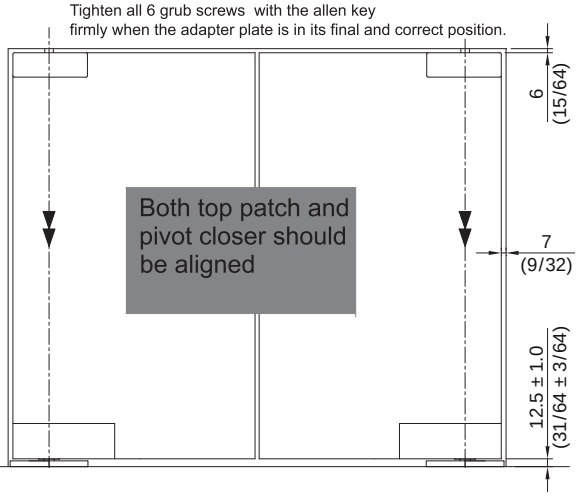

Both top patch and pivot closer should be aligned

11

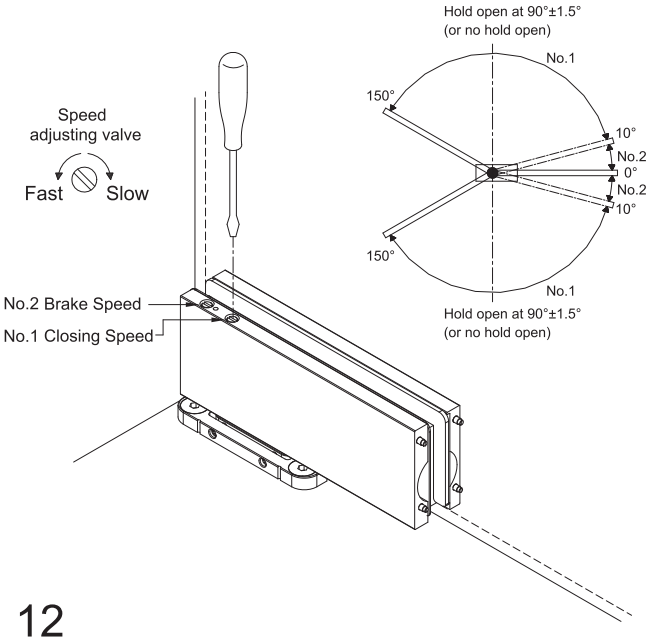

12

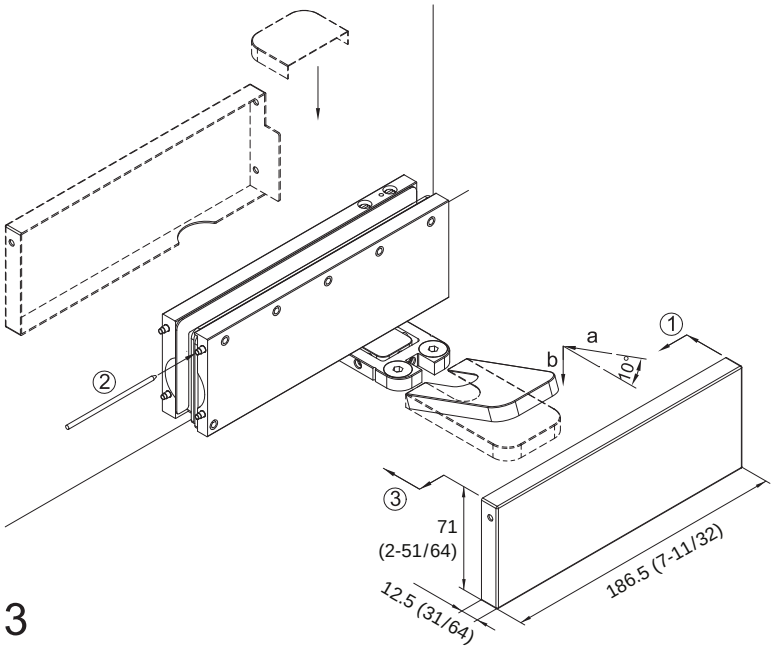

13

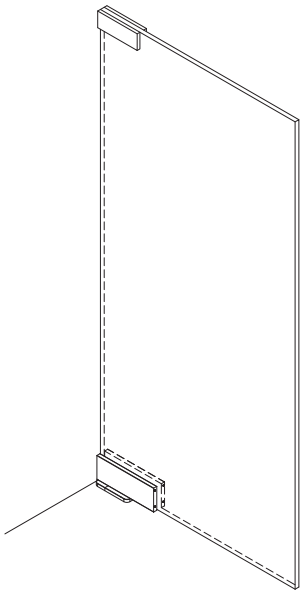

14

E. & O. E. ©Kenwa, Osaka-Japan. 2108A-II-PDC100(S)